Measuring Density

Exam code: 0625 & 0972

Download PDF

Written by: Leander Oates
Reviewed by: Caroline Carroll
Updated on 9 January 2026

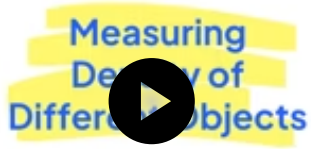

SaveMyExams

Did this video help you? Yes No

Measuring density

Equipment list

Apparatus	Purpose
Regular and irregularly shaped objects	Objects used to measure the density of
A suitable liquid (e.g. sugar or salt solution)	Liquid to use to measure the density
A 30 cm ruler	To measure objects up to 30 cm in length
Vernier Calipers	To measure objects to around 15 cm in length
Micrometer	To measure objects to around 3 cm in length
Digital Balance	To measure the mass of objects

Help me understand

Stuck on something?
Ask questions and get help with exactly what you're revising.
Got it

Measuring cylinders	To measure the volume of liquid

- **Resolution** of measuring equipment:
  - 30 cm ruler = 1 mm
  - Vernier calipers = 0.01 mm
  - Micrometer = 0.001 mm
  - Digital balance = 0.01 g

Experiment 1: measuring the density of regularly shaped objects

- The aim of this experiment is to determine the densities of regular objects by using measurements of their dimensions

Variables:

- **Independent variable** = Type of shape / volume
- **Dependent variable** = Mass of the object

Method

Equipment needed to measure the density of regularly shaped objects

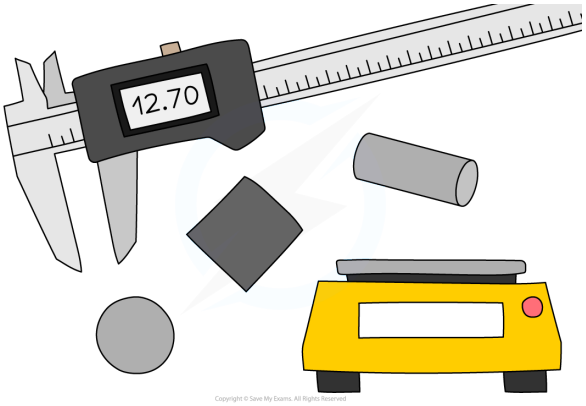

1. Place the object on a digital balance and note down its mass
2. Use either the ruler, Vernier callipers or micrometer to measure the object's dimensions (width, height, length, radius) – the apparatus will depend on the size of the object
3. Repeat these measurements and take an average of these readings before calculating the density

Results

An example results table to measure the density of regularly shaped objects

CONVERT FROM g TO kg (DIVIDE BY 1000)	AVERAGE MASS / g			
	AVERAGE MASS / kg			
CONVERT FROM cm TO m (DIVIDE BY 100)	DIMENSION READING / cm	HEIGHT	RADIUS	RADIUS
		WIDTH		LENGTH
		LENGTH		
	AVERAGE DIMENSIONS / m	HEIGHT = WIDTH = LENGTH =	RADIUS =	RADIUS = LENGTH =
	VOLUME / m^3	$H \times W \times L$	$\frac{4}{3} \times \pi \times R^3$	$\pi \times R^2 \times L$

REPEAT READINGS

Copyright © Save My Exams. All Rights Reserved

A suitable results table must contain space for multiple readings and any calculations that need to performed

Analysis of results

- Calculate the volume of the object depending on whether it is a cube, sphere, cylinder (or other regular shape)
- Then use the formula for density to calculate the density of each object
  - The formulae for volume and density are explained in the revision note Density

Experiment 2: measuring the density of irregularly shaped objects

- This experiment aims to determine the densities of irregular objects using a displacement technique

Variables:

- **Independent variable** = Different irregular shapes / mass
- **Dependent variable** = Volume of displaced water

Method

Equipment needed to measure the density of irregularly shaped objects

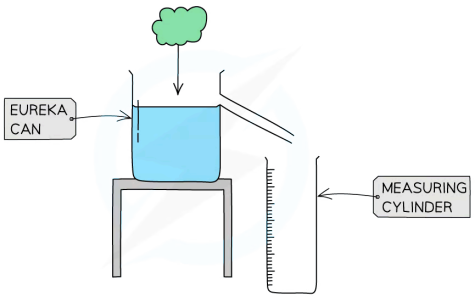

Copyright © Save My Exams. All Rights Reserved

Apparatus for measuring the density of irregular objects

1. Place the object on a digital balance and note down its mass
2. Fill the eureka can with water up to a point just below the spout
3. Place an empty measuring cylinder below its spout
4. Carefully lower the object into the eureka can

calculating the density

- Alternatively, the object can be placed in a measuring cylinder containing a known volume of liquid, and the change in volume then measured

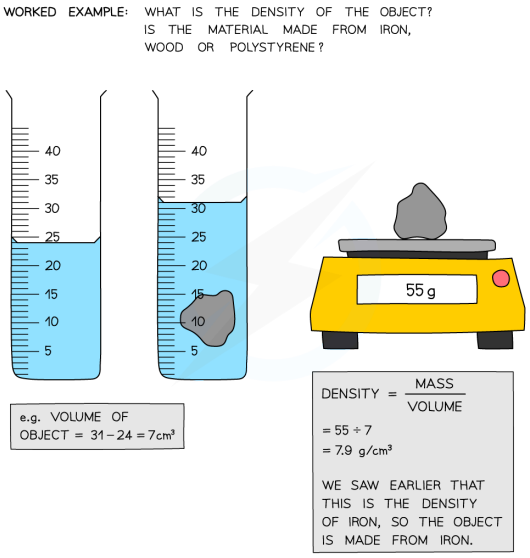

When an irregular solid is placed in a measuring cylinder, the level of the liquid will rise by an amount equal to the volume of the solid

- Once the mass and volume of the shape is known, its density can be calculated

Results

An example results table to measure the density of irregularly shaped objects

OBJECT	MASS OF OBJECT / g			AVERAGE MASS / kg	VOLUME OF WATER DISPLACED / m³			AVERAGE VOLUME OF WATER DISPLACED / m³
	1	2	3		1	2	3	
1								
2								
3								

A suitable results table must contain space for multiple readings and any calculations that need to performed

Analysis of results

- The volume of the water displaced is equal to the volume of the object
- Once the mass and volume of the shape are known, the density can be calculated using:

$$\rho = \frac{m}{V}$$

- This experiment aims to determine the density of a liquid by finding a difference in its mass

Variables:

- **Independent variable** = Volume of water added
- **Dependent variable** = Mass of cylinder

Method

Equipment needed to measure the density of liquid

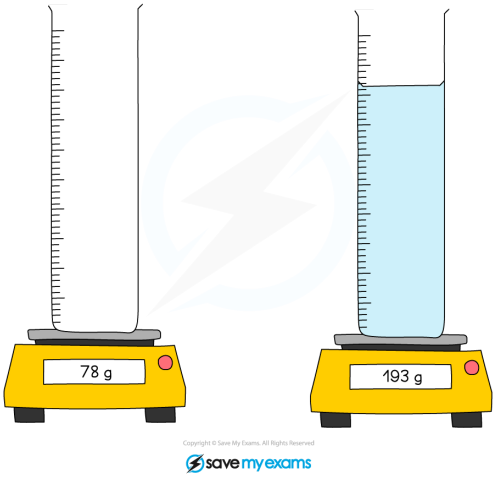

Apparatus for determining the density of a liquid

1. Place an empty measuring cylinder on a digital balance and note down the mass
2. Fill the cylinder with the liquid and note down the volume
3. Note down the new reading on the digital balance
4. Repeat these measurements and take an average before calculating the density

Results

An example results table to measure the density of a liquid

MASS OF CYLINDER BEFORE / g			AVERAGE MASS / kg	VOLUME OF WATER ADDED / m³	MASS OF CYLINDER WITH WATER / g			AVERAGE MASS OF CYLINDER WITH WATER / kg
1	2	3			1	2	3	

Copyright © Save My Exams. All Rights Reserved

A suitable results table must contain space for multiple readings and any calculations that need to performed

Analysis of results

Mass of liquid = Mass of cylinder with water – mass of cylinder

- Once the mass and volume of the liquid are known, the density can be calculated using the equation for calculating density
  - This is explained in the revision note Density

Evaluating the experiments

Systematic errors

- Ensure the digital balance is set to zero before taking measurements of mass
  - This includes when measuring the density of the liquid – remove the measuring cylinder and zero the balance before adding the liquid

Random errors

- A main cause of error in this experiment is in the measurements of length
  - Ensure to take repeat readings and calculate an average to keep this error to a minimum
- Place the irregular object in the displacement can carefully, as dropping it from a height might cause water to splash, which will lead to an incorrect volume reading

Safety considerations

- There is a lot of glassware in this experiment, ensure this is handled carefully
- Water should not be poured into the measuring cylinder when it is on the electric balance
  - This could lead to electric shock
- Make sure to stand up during the whole experiment, to react quickly to any spills

Examiner Tips and Tricks

There is a lot of information to take in here! When writing about experiments, a good sequence is as follows:

- If you need to use an equation to calculate something, start off by giving it as this will give you some hints about what you need to mention later
- List the apparatus that you need
- State what measurements you need to make (your equation will give you some hints) and how you will measure them
- Finally, state that you will repeat each measurement several times and take averages

Teacher only

Fresh, expert-written questions
Students can't access them
Fair accurate tests - built fast
Explore in Test Builder

Test yourself

Was this revision note helpful? Yes No

Previous Next

Course Study tools All topics

Resources

Learning Hub
Scholarship
Join
Past Papers
Solution Banks
Sitemap

Dashboard

Overview
Brand ambassador
Profile
Subscription
Settings
Log out

Company

About us
Exam Specificity
Content Quality
Promotions
Jobs
Terms
Privacy
Cookie Policy
Help and Support

Subjects

Biology
Chemistry
Physics
Maths
Geography
English Literature
Psychology
All Subjects

© Copyright 2015–2026 Save My Exams Ltd. All Rights Reserved.

Neither IBO nor College Board were involved in the production of, and do not endorse, the resources created by Save My Exams.